REV.	DESCRIPTION	DATE	DRAFTER	APPROVER
A1	DWG.REL	2020.05.22	DENG	JIN

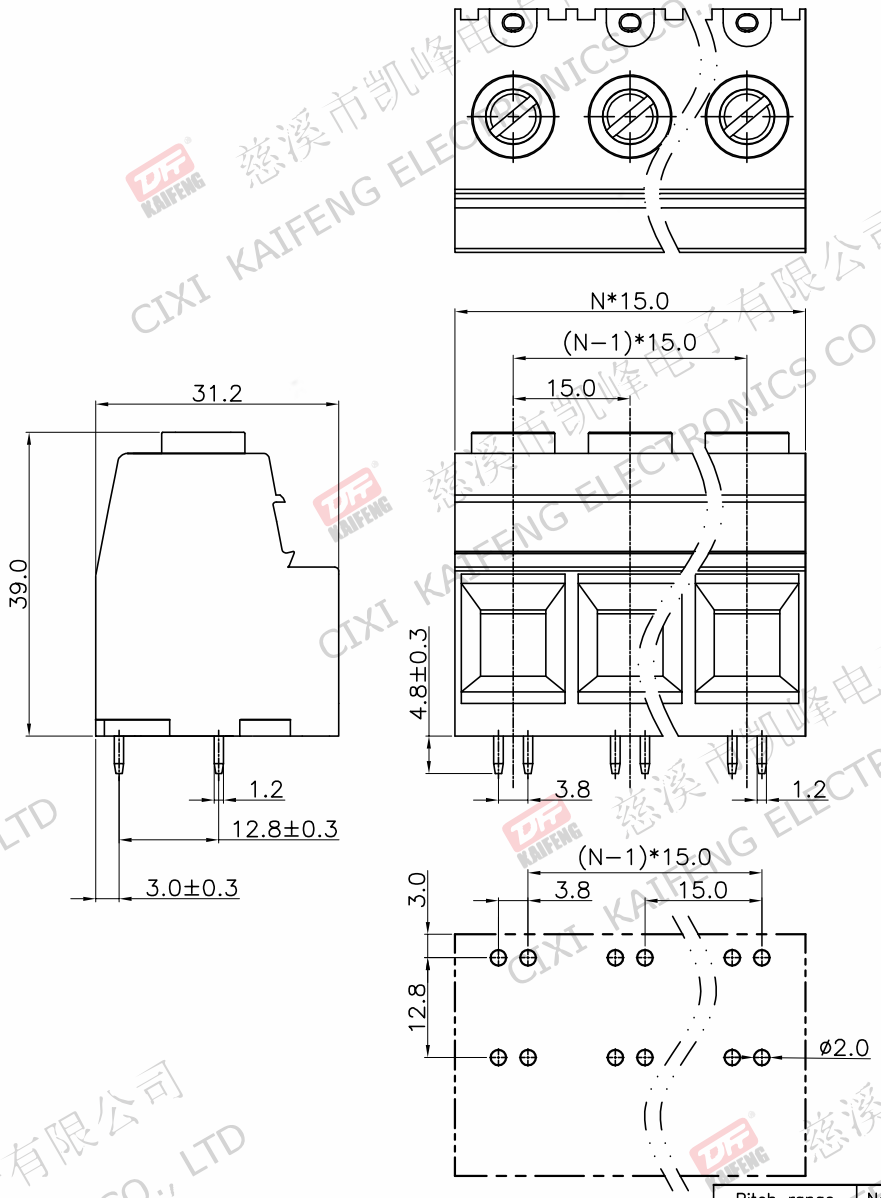

P.C.B.LAYOUT

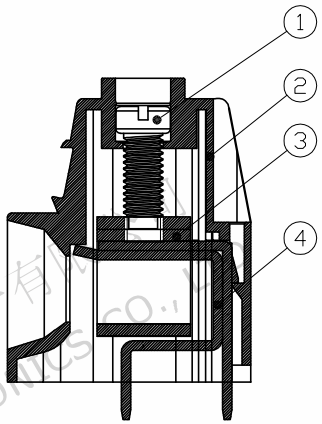

- Material
  ①Screws : M5.0 steel, Zinc plated, "−" slot type
  ②Housing : PA66, UL94V−0
  ③Clamp : Steel, Zinc plated
  ④Pin header : Copper alloy, Tin plated

- Electrical

	UL	IEC
Rated voltage :	600V	1000V
Rated current :	115A	125A

  Contact Resistance: 20mΩ
  Insulation resistance: 500MΩ/DC500V
  Withstanding Voltage : AC3500V/1min
  Wire range: 20−2AWG 35.0mm²

- Mechanical
  Operating temperature:−40℃∽+105℃
  Soldering temperature:250℃±5/5sec
  Torque: 2.0N.m (20.40Lb.in)
  Strip length: 15−18mm

- RoHS compliance

HOW TO ORDER

KF137−15.0−XXP−1 X−XXXXX

- KF137: MODEL
- 15.0: Pitch:mm
- XXP: No.of poles: 2~24P
- 1: 1:Single Pitch, 2:Double Pitch
- X: Color: G:Green, R:Red, K:Black, W:White, O:Orange, B:Blue, GR:Gray
- XXXXX: Customer Request

Pitch range			Nominal dimension range						
>0 ~ 6	>6 ~ 10	>10 ~ 24	>0 ~ 30	>30 ~ 60	>60 ~ 100	>100 ~ 150	>150	0.1/10	∠
±0.15	±0.20	±0.30	±0.30	±0.50	±0.70	±1.00	±1.30	±2°	

DRAWING TYPE	CUSTOMER DRAWING		
SCALE	1:1	SHEET	1 OF 1
DRAWING NO.	W15000812		

PROJECTION		TITLE	KF137−15.0−XXP−1X
UNIT	mm		
SHEET SIZE	A4	SERIES	KF137

慈溪市凯峰电子有限公司
CIXI KAIFENG ELECTRONICS CO.,LTD